| REVISIONS | | | | |
|---|---|---|---|---|
| ZONE | REV. | DESCRIPTION | DATE | APPROVED |
| | | | | |

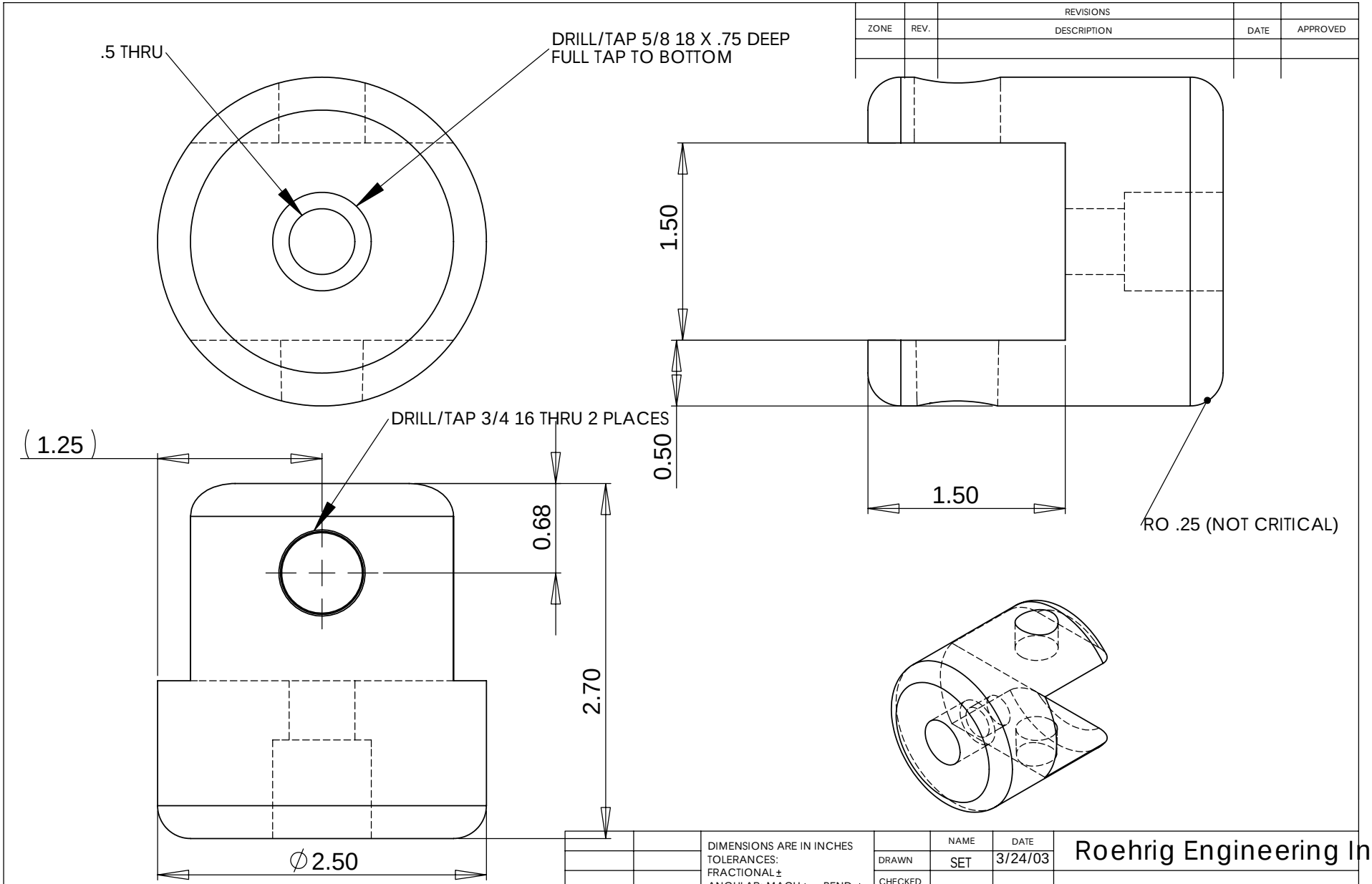


**PROPRIETARY AND CONFIDENTIAL**

THE INFORMATION CONTAINED IN THIS DRAWING IS THE SOLE PROPERTY OF <INSERT COMPANY NAME HERE>. ANY REPRODUCTION IN PART OR AS A WHOLE WITHOUT THE WRITTEN PERMISSION OF <INSERT COMPANY NAME HERE> IS PROHIBITED.

| NEXT ASSY | USED ON |
|---|---|
| APPLICATION | |

DIMENSIONS ARE IN INCHES
TOLERANCES:
FRACTIONAL ±
ANGULAR: MACH ± BEND ±
TWO PLACE DECIMAL ±
THREE PLACE DECIMAL ±

MATERIAL: cold roll mild steel

FINISH: --

DO NOT SCALE DRAWING

| | NAME | DATE |
|---|---|---|
| DRAWN | SET | 3/24/03 |
| CHECKED | | |
| ENG APPR. | | |
| MFG APPR. | | |
| Q.A. | | |

COMMENTS:

Roehrig Engineering Inc.

Universal Clevis

| SIZE | DWG. NO. | REV. |
|---|---|---|
| A | R-5ABCDE-0004 | |

SCALE:1:1 WEIGHT: SHEET 1 OF 1